35LYBB001

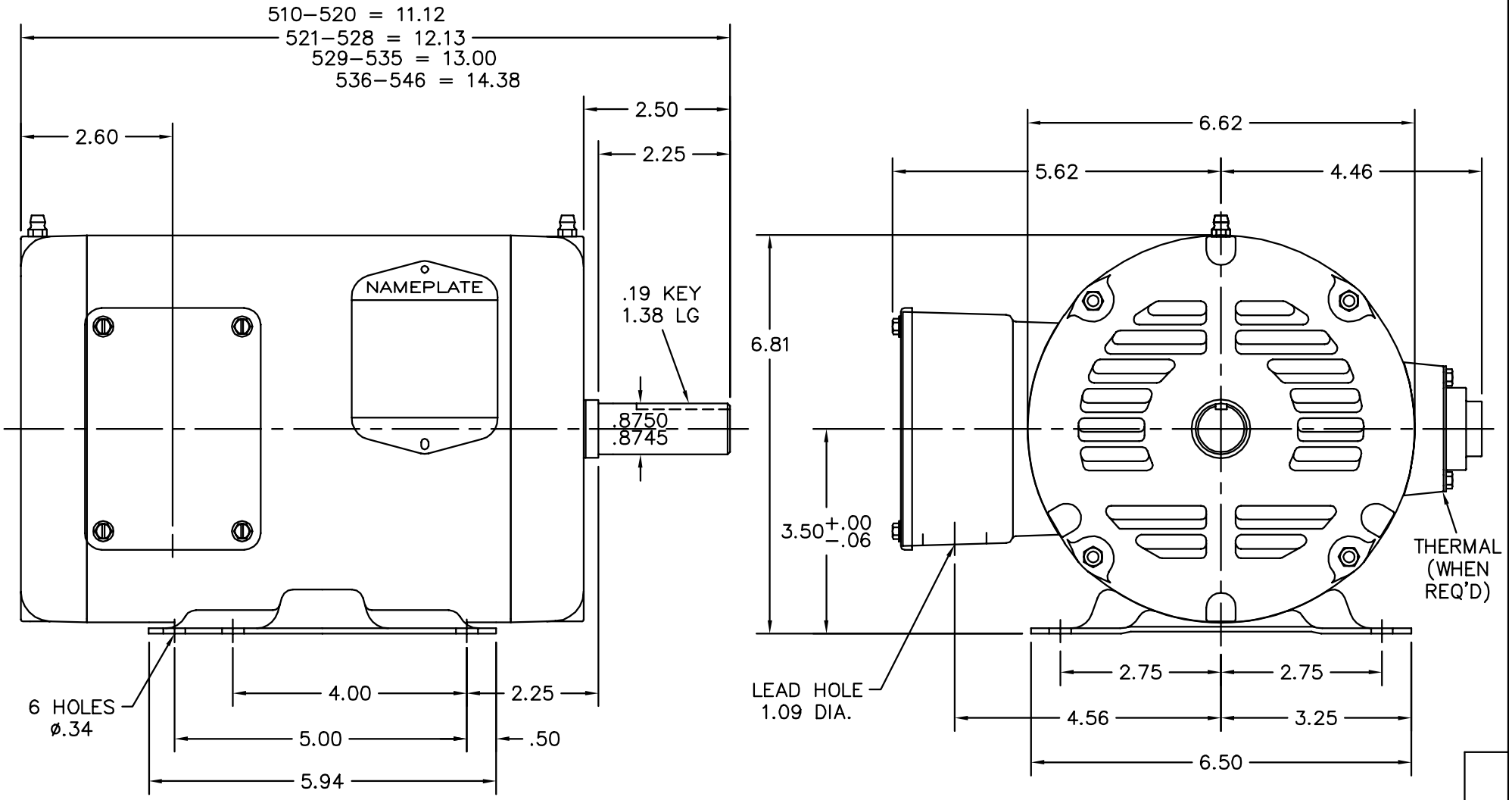


CUSTOMER IS RESPONSIBLE FOR DETERMINING THAT BALDOR'S PRODUCT WILL PERFORM SUITABLY IN THE INTENDED APPLICATION.

| | | | |
|---|---|---|---|
| REV. DESC: NEW | | | BALDOR • DODGE • RELIANCE |
| REV. LTR: – | VERSION: 00 | TDR: 000000521253 | |
| FILE: \AAA\00168\388 | | REVISED: 10:26:21 12/21/2009 | STD HORZ 143–145T OPEN 35M W/1.09 DIA. LEAD HOLE |
| MTL: – | | BY: ENALEMO | SH 1 of 1 |

35LYBB001